Parts List		
STOCK No	DESCRIPTION	QTY
2F1204	M8 Lock Nut	2
2F1430	M4 Washer	1
2F1715	Screw	1
2M1085	Plastic Knob	1
2M2069	Black Washer	1
2M6107	Barrel Screw Insert	1
2P1031	Plunger Ally 42mm	1
2P1036	Plunger Ally 15mm	1
2XH002	Hanging Hook	1
2XS022	Support Strap	2
3F2419	Steel Washer	1
3F2439	Formed Washer	1
3R6370	Rack 370mm	1
3XB043	Barrel Screw (Drilled)	1
3XR025	Rod Guide	1
3XY003	Yoke	1
4AP9015	Frame Assembly	1
7A5100	Electraflow Butt	1
7A5200	Electraflow Battery	1
7R1210	Rod 400mm	1

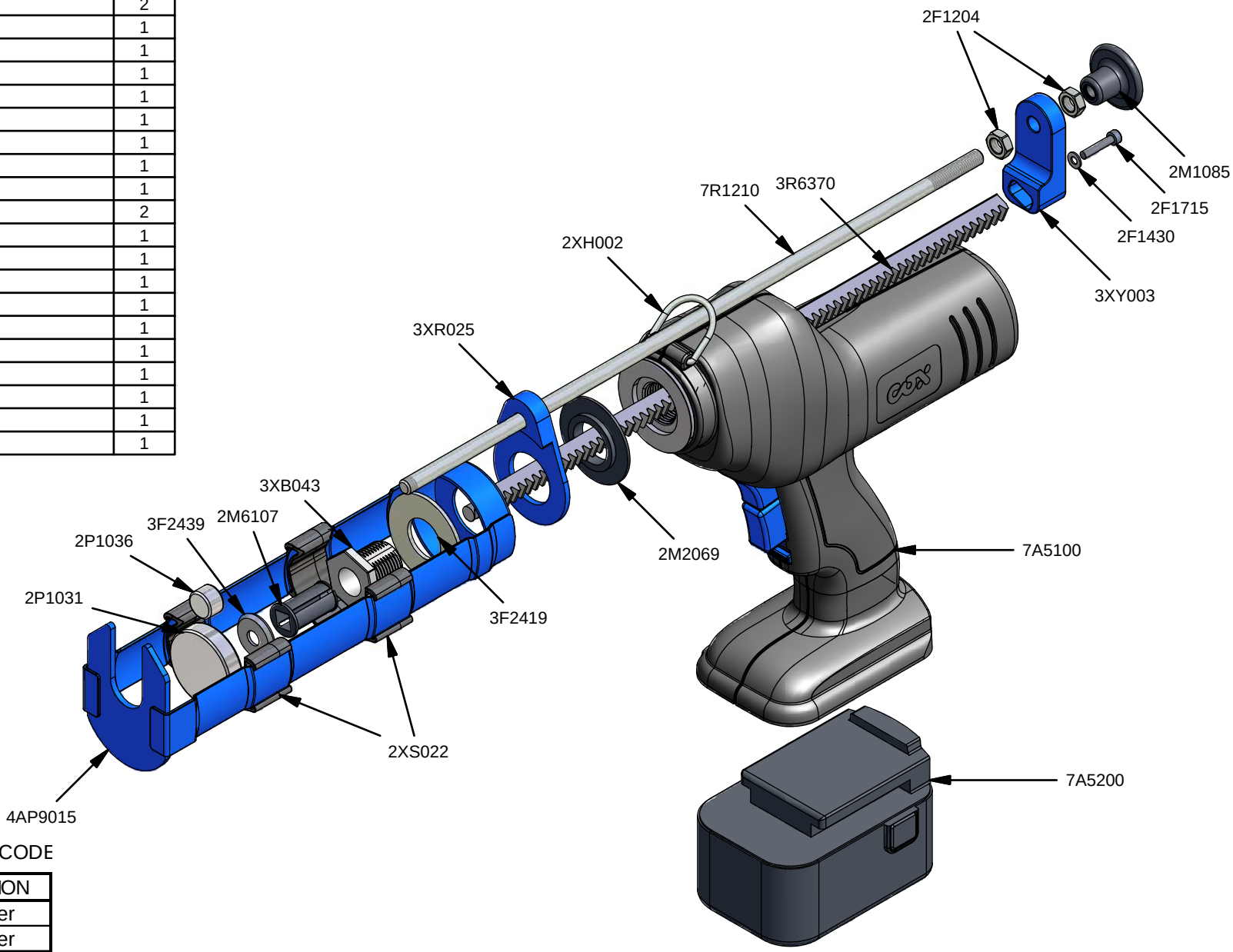

BATTERY CHARGER SPARES CODE

STOCK No	DESCRIPTION
7A5150	EU Charger
7A5151	US Charger
7A5152	UK Charger
7A5153	AU Charger

Electraflow 330

The original

www.pccox.co.uk
sales@pccox.co.uk
TEL:44(0)1635 264500

REV	DATE
C	17/01/2011

Parts List		
STOCK No	DESCRIPTION	QTY
2F1204	M8 Lock Nut	2
2F1430	M4 Washer	1
2F1715	Screw	1
2M1085	Plastic Knob	1
2M2069	Black Washer	1
2M6107	Barrel Screw Insert	1
2P1031	Plunger Ally 42mm	1
2P1036	Plunger Ally 15mm	1
2XH002	Hanging Hook	1
2XS022	Support Strap	2
3F2419	Steel Washer	1
3F2439	Formed Washer	1
3R6370	Rack 370mm	1
3XB043	Barrel Screw (Drilled)	1
3XR025	Rod Guide	1
3XY003	Yoke	1
4AP9015	Frame Assembly	1
7A5100	Electraflow Butt	1
7A5200	Electraflow Battery	1
7R1210	Rod 400mm	1

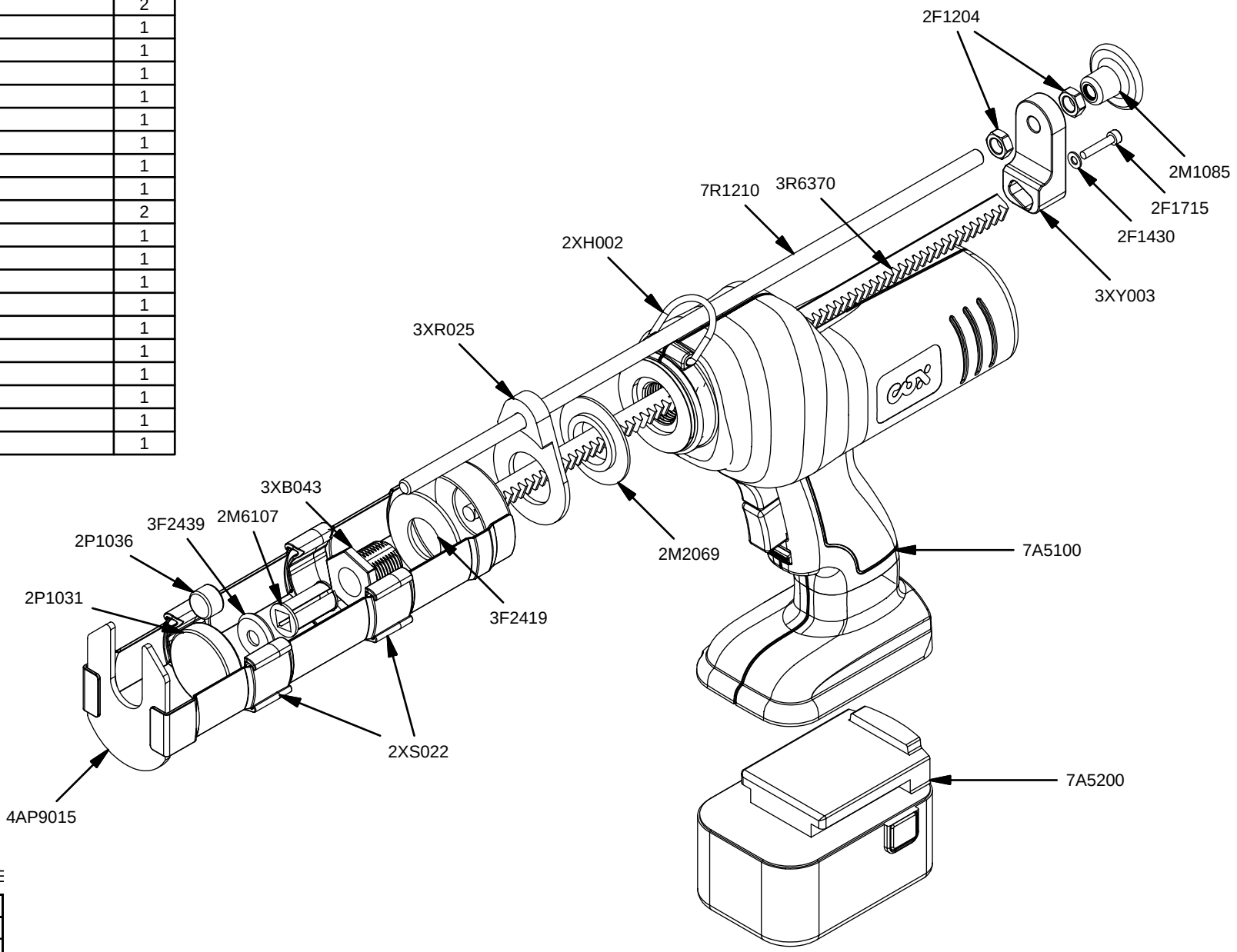

BATTERY CHARGER SPARES CODE

STOCK No	DESCRIPTION
7A5150	EU Charger
7A5151	US Charger
7A5152	UK Charger
7A5153	AU Charger

Electraflow 330

The original

www.pccox.co.uk
sales@pccox.co.uk
TEL:44(0)1635 264500

REV	DATE
C	17/01/2011