The original

TECHNICAL DATASHEET

SoloPower-clamp™

600mm

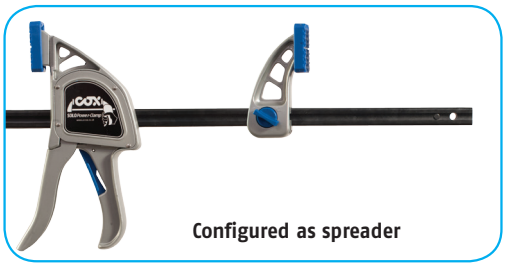

Configured as spreader

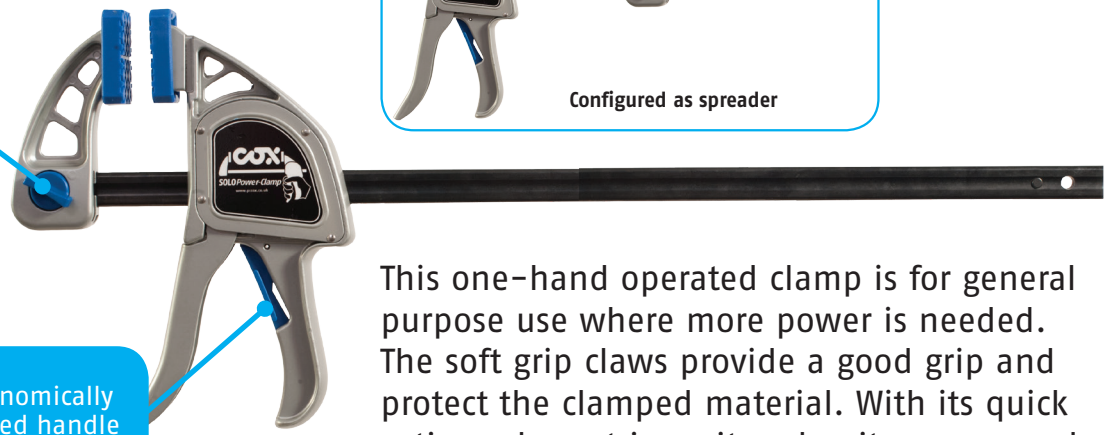

This one-hand operated clamp is for general purpose use where more power is needed. The soft grip claws provide a good grip and protect the clamped material. With its quick action release trigger it makes it an easy and safe tool to use.

FEATURES AND BENEFITS:

- More powerful general purpose clamp (compared to Easiclamp)
- Soft rubberized polymer claw pads to protect the clamped material
- High quality, heat treated and corrosion resistant steel bar
- Can be used as a clamp OR spreader

The new Cox Soloclamp Bar Clamp & Spreader is designed for quick clamping of materials to be glued, fixed, drilled or sawn as well as many other uses. They are an ideal workmate for joiners, plumbers, glaziers, electricians and engineers for use in workshops, sites and production lines making them excellent tools for both professional and DIY use.

For more information call +44(0)1635 264500
Or visit www.pccox.co.uk

The original

The original

TECHNICAL DATASHEET

SoloPower-clamp™

600mm

MATERIAL PACKAGING DATA:

- Working size: 600mm (23.6 inches)

TOOL POWER:

- Maximum Thrust (kN): 2.5kN clamp force (others available)
- Tool Weight: 1280g
- Handle Material: Blue/Silver Cast aluminium (main body); rubberized polymer claw pads; acetal dial and trigger
- Bar Material: Black Heat treated (blackened) steel bar
- Certificates: ISO, CE, REACH
- Packaging Options: 6 or 12 per box

WEB LINKS:

- Academy video
  www.pccox.co.uk/en/cox-academy

OTHER MODELS AVAILABLE:

- Soloclamp
- Powerclamp
- Ultraclamp

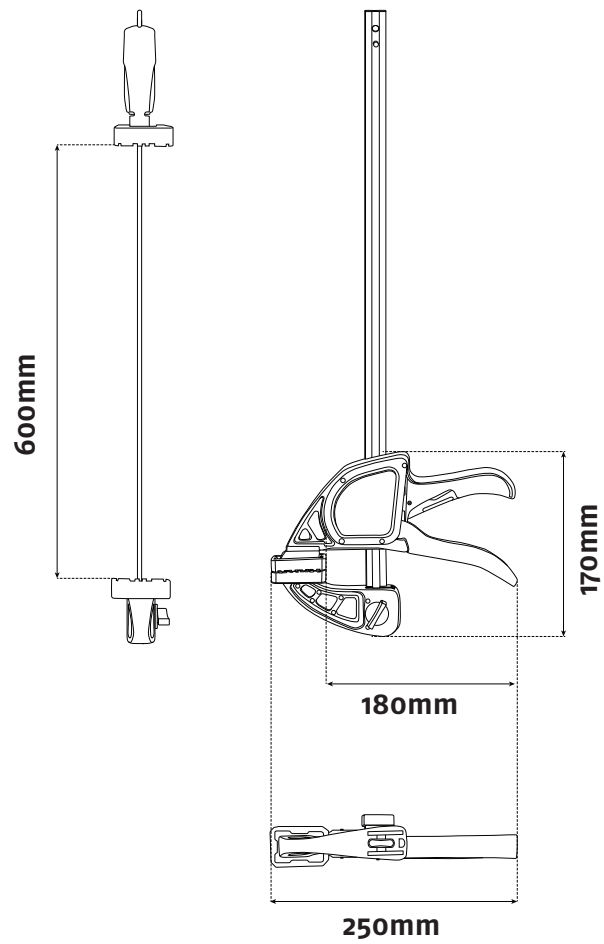

PC Cox Ltd., Turnpike Road, Newbury, Berkshire, RG14 2LR
T Sales +44 (0) 1635 264500 F +44 (0) 1635 264555
E sales@pccox.co.uk
www.pccox.co.uk

The original

©PC Cox Ltd.2015 Cox is a trademark of PC Cox Ltd. Every effort has been made to ensure that the information contained in this leaflet was correct at the time of going to press. However, the company retains the right to change any specification without notice, in line with the company's policy of continual product development.
1P3327